CE REFRESHER: LIQUID AGITATION/11

Applications analysis for turbine agitators

Step-by-step evaluation of a process using agitator-equipped vessels illustrates how to design equipment for increased capacity by using scale-up methods or the desired process response.

Richard W. Hicks and *David S. Dickey, Chemineer, Inc.*[*]

☐ Analysis of similar applications often can determine the agitation requirements for a process. The details of a specific process rarely affect the basic requirements for agitation. Thus, bulk-polymerization reactors, fermenters, lime-storage tanks, etc., can be treated as classes of agitation problems. The primary variable, scale of agitation, and other design criteria can be assigned to each class.

The process design engineer usually knows the most about the agitation level required for a given process. Understanding how to convert the information about previous experience into a design for new equipment can be valuable. Our emphasis in this article will be to discuss some of the methods for using process experience to design agitation equipment.

Application analysis shows how to evaluate process and mechanical experience. Process evaluation includes: general process-performance, fluid-properties and agitator-design characteristics. Mechanical evaluation includes the performance of: prime mover and drive, shaft-and-impeller system, and seals, as well as support or installation considerations.

Other guidelines, however, should be weighed against previous process experience. Just because an existing agitator performs the process function does not mean that the design cannot be improved. Existing agitators should be compared to the selections indicated by the design procedure to determine the scale of agitation. Engineering judgment is essential to evaluate such comparisons and to reassess the agitation requirements.

Since redesign of process equipment frequently involves increased capacity, scale-up techniques can be used. Also, the fundamental correlations provide comparisons for process performance such as heat transfer and blend time. Applications analysis involves aspects of the agitator design procedure (Parts 4, 5, and 6 of this series[†]), process scale-up (Part 10), and agitation fundamentals (Parts 2 and 3).

Process evaluation of agitation

The objectives of process evaluation are to improve an existing process or develop new equipment for a similar process. However, existing equipment should be evaluated for process performance and economical operation. Alternate equipment selections (resulting from the evaluation) should be similarly checked to determine possible improvements.

Unfortunately, not all agitator systems perform at optimum conditions. Frequently, minor changes in an agitator configuration can be made to improve process performance. Replacing or extending the blades on an underloaded agitator, for example, usually will increase performance. Inadequate baffles or incorrect baffle placement can cause inefficient operation.

A variety of reasons may exist for the replacement of an existing agitator. In a critical application, such as for a process reactor, a new agitator may be a relatively inexpensive process change to improve overall performance. Many chemical processes undergo an evolutionary phase following initial design. Several minor process changes may accumulate until a major change in agitation level is necessary.

When a new process is being designed, an opportunity exists to examine alternatives and perform a degree of optimization. One of the first steps in redesigning a given process should involve a thorough evaluation of similar process equipment.

Applying the basic design methods described in Parts 4, 5, and 6 of the series will always be helpful in developing proper agitation for a new process. Even if the objective is to duplicate existing equipment, reevaluation of agitator design may reveal underagitated or

---

[*] To meet the authors, see *Chem. Eng.*, Feb. 2, 1976, p. 100 and Jan. 5, 1976, p. 145.

[†] Articles published thus far in this CE REFRESHER: Part 1, Dec. 8, 1975, p. 110; Part 2, Jan. 5, 1976, p. 139; Part 3, Feb. 2, 1976, p. 93; Part 4, Apr. 26, 1976, p. 102; Part 5, May 24, 1976, p. 144; Part 6, July 19, 1976, p. 141; Part 7, Aug. 2, 1976, p. 89; Part 8, Aug. 30, 1976, p. 101; Part 9, Sept. 27, 1976, p. 109; Part 10, Oct. 25, 1976, p. 119.

Process evaluation for agitation **Table I**

System geometry and fluid properties

- Vessel: tank diameter, height of straight side, head design, overall height
- Baffle system: number, location, width
- Fluid batch: volume (maximum/minimum), liquid level (maximum/minimum)
- Fluid properties: specific gravity (maximum/minimum), viscosity (maximum/minimum)

Turbine agitator characteristics

- Agitator drive: prime mover (nameplate power), prime mover (measured power), measured shaft speed
- Impeller system: number, type, number of blades, diameter, blade width, clearance off bottom

Performance evaluation

- Classification: blending and motion, solids, suspension, gas dispersion
- Equivalent volume
- Primary variable: viscosity, solids settling velocity, superficial gas velocity
- Required process result
- Scale of agitation required for process result
- Scale of agitation available with equipment

overagitated units. If applications analysis indicates that an agitator is overdesigned, a cost savings may be possible through the use of a properly sized agitator. Process evaluation may also reveal a unit operating near the lower limit of effective agitation. In such cases, process productivity may be improved by using a higher level of agitation.

Several selection approaches can be used when developing a new process that requires larger tanks and agitators to increase the capacity. Obviously, the scale-up methods described in Part 10 can be applied to process-scale as well as laboratory-scale data.

An alternate approach to redesign is by application analysis in which the required scale of agitation is determined from previous process experience. Once the scale level has been determined, equipment designs can be made by the agitator-design procedures (described in Parts 4, 5, and 6). Correct evaluation of an existing unit should create a redesign equivalent to the results obtained by scale-up methods.

For redesigning agitation equipment, it is best to compare the results of more than one method. By comparing the results of both a direct scale-up and a redesign based on scale of agitation, some degree of optimization and process evaluation can be done. Later in this article, we will develop and demonstrate several aspects of process evaluation and agitator redesign, based on applications analysis, by means of a solved problem.

Data for process evaluation

The points that must be considered for a process evaluation are essentially the same as those used in developing design information. Typical items for process evaluation of an agitator are shown in Table I.

The items listed under system geometry and fluid properties in Table I are essential to any agitation problem. Vessel geometry not only establishes the limits on volume of the agitated batch but also may indicate whether multiple turbines are necessary. Baffles are needed for most low-viscosity and medium-viscosity applications of turbine agitators. A nonstandard baffle system (i.e., other than four baffles located at 90°) may have adverse effects on system performance. Both the size of the fluid batch and its properties have a direct effect on the magnitude of the agitation problem.

A careful survey of existing agitator characteristics can be most revealing. A comparison between the nameplate power on the prime mover and the measured power may reveal considerable underloading. Measuring the agitator-shaft speed may indicate that the speed has been changed by the substitution of change gears to other than those in the original unit.

Selecting a horsepower-and-speed combination to accomplish a given agitation result relies on proper design of an impeller system. Guidelines as to the number, size and location of turbine impellers were given (Parts 4, 5, and 6) in conjunction with each classification of agitator design. Impeller systems should conform reasonably well to these guidelines. If an existing impeller system differs significantly, justification should be sought.

Then an evaluation of the agitator performance must be made (Table I). Classification of the agitation problem, along with equivalent volume and primary variable, establish which design approach should be considered and what the difficulty of the problem is.

The final step in evaluating an agitator application is to determine the scale level that is available with existing equipment. The level of agitation is determined not only by the horsepower and speed of the agitator drive by also by the correct design of the impeller system. Correct sizing of a turbine agitator should reveal a consistency between the equipment selection and the desired process results.

Example of process redesign and scale-up

We will use an illustrative example in order to describe the various aspects of process evaluation and application analysis. Fig. 1 shows the basic elements of a polymerization process for making high-impact polystyrene. This flowsheet is not meant to represent any specific process. Instead, it reveals typical process elements involving agitation, including four different agitated vessels.

Tank A is a dissolving tank in which crumbs of synthetic rubber are dissolved in styrene monomer under a high level of agitation. After filtering, a batch of monomer and dissolved rubber is transferred to a holding tank (Tank B). Some preheating of the batch is done in the holding tank. Tank C is used to suspend catalyst particles in a combination of monomer and additive for the polymer batch. The contents of the holding tank along with additional monomer and the catalyst-additive charge from Tank C are combined in the reactor (Tank D) where bulk polymerization occurs.

Our objective will be to redesign the existing process equipment to five times the present capacity. Each of the four tanks will be examined by using several different methods for scale-up or redesign in order to establish the new agitator requirements. For a given situation, any one of these methods could be applied to all of

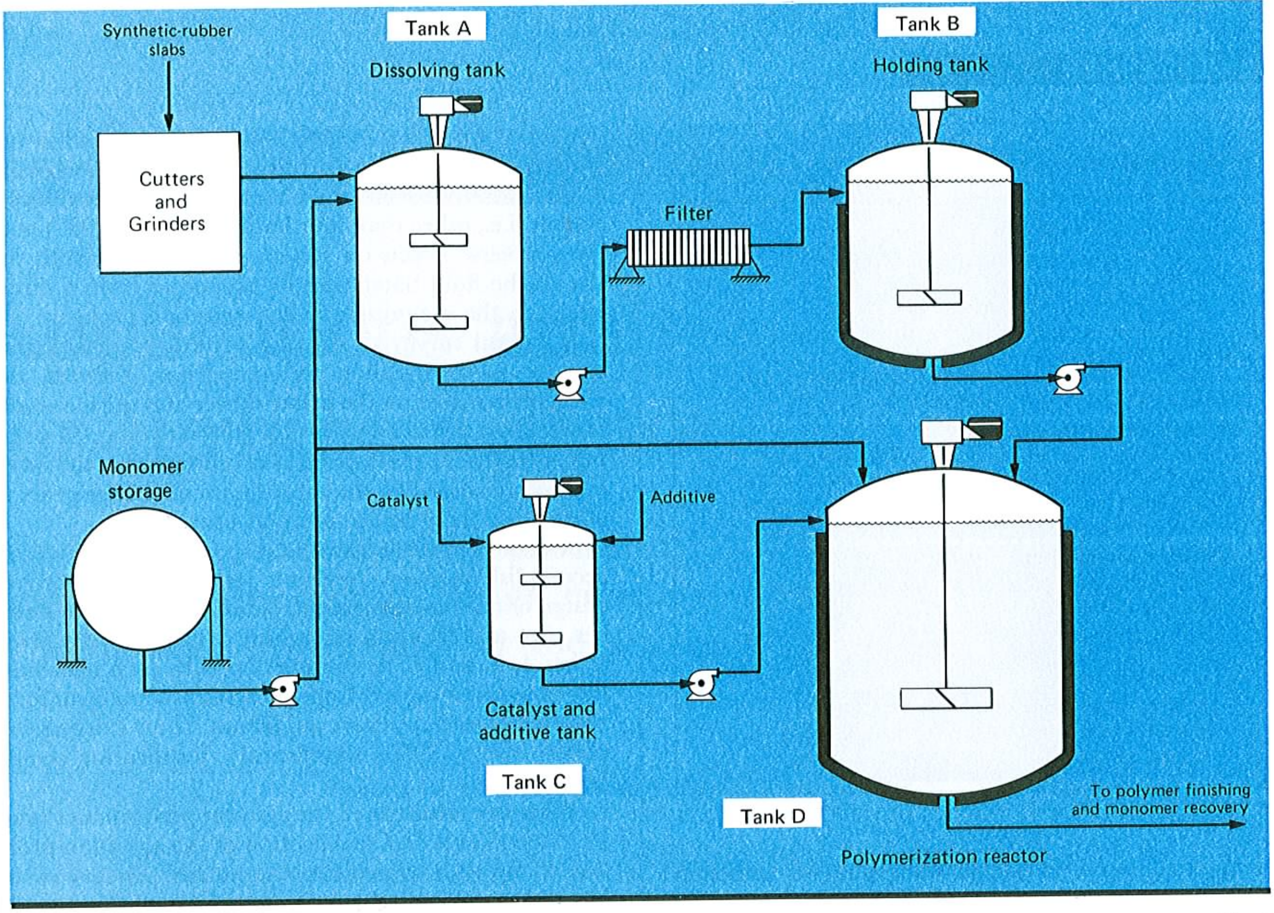

Agitator-equipped vessels have major role in example of a bulk-polymerization process **Fig. 1**

the tanks. However, by demonstrating different approaches to similar problems, we will cover many aspects of applications analysis.

A drawing for each of the existing four tanks is shown in Fig. 2. The principal dimensions for each of the redesigned tanks are shown in Fig. 3. The data in Table II summarize the process variables and additional equipment details.

Evaluating and redesigning Tank A

First, let us examine the dissolving tank (Tank A). In this tank, a solution must be developed by dissolving a 5% rubber crumb in styrene monomer. Actual volume of the existing batch is 1,000 gal; specific gravity of the resulting solution is 0.9, which gives an equivalent volume of 900 gal. Maximum viscosity of the final solution is 5,000 cp, and settling velocity of the rubber crumb in the initially low-viscosity monomer is less than 2 ft/min (some of the crumb will even float).

Whether this problem should be treated as blending and motion or solids suspension depends on the relative difficulty encountered in each of the two classifications.

The agitator on the existing equipment has a 10-hp motor with an agitator drive for 100-rpm shaft speed. Referring to Table II in Part 4 of this series, we find that 10 hp at 100 rpm should provide a scale of agitation of 9 (for blending and motion) for an equivalent volume of 1,000 gal in a 5,000-cp liquid. The same 10-hp/100-rpm unit will provide a scale of agitation of 10 if the problem is treated as a difficult solids suspension for an equivalent volume of 1,000 gal and particles with a settling velocity of 25 ft/min (see Table IV in Part 5 of this series). Hence, a scale of agitation considerably more than 10 for solids suspension would be provided for particles settling at less than 2 ft/min. Therefore, the design classification for Tank A is controlled by blending and motion.

In order to increase the volume of Tank A from 1,000 to 5,000 gal*, with geometric similarity, a scale ratio of 1.71 is necessary, as obtained from:

$$R = (V_2/V_1)^{1/3} = (5{,}000/1{,}000)^{1/3} = 1.71 \qquad (1)$$

An exact scale-up on this basis would indicate a new tank diameter of:

$$T_2 = T_1(R) = 66(1.71) = 113 \text{ in.} \qquad (2)$$

From a practical standpoint, a 9.5-ft-dia. tank (114 in.) is sufficiently close for redesign. The actual scale ratio becomes:

$$R = 114/66 = 1.73 \qquad (3)$$

Applying this ratio to the other elements of tank geometry results in the dimensions shown for the scaled-up Tank A in Fig. 3. For geometric similarity, the diameters for both large-scale turbines should be:

$$D_2 = D_1(R) = 32(1.73) = 55.3 \text{ in.} \qquad (4)$$

The speed of the large-scale agitator is determined by applying the scale-up rule for equal liquid motion, i.e., $n = 1$ (refer to Part 10 of this series):

$$N_2 = N_1(1/R)^n \qquad (5)$$
$$N_2 = 100(66/114)^1 = 100(1/1.73) = 57.9 \text{ rpm}$$

---

*The subscript numerals 1 and 2 indicate small scale (initial size) and large scale (final size), respectively.

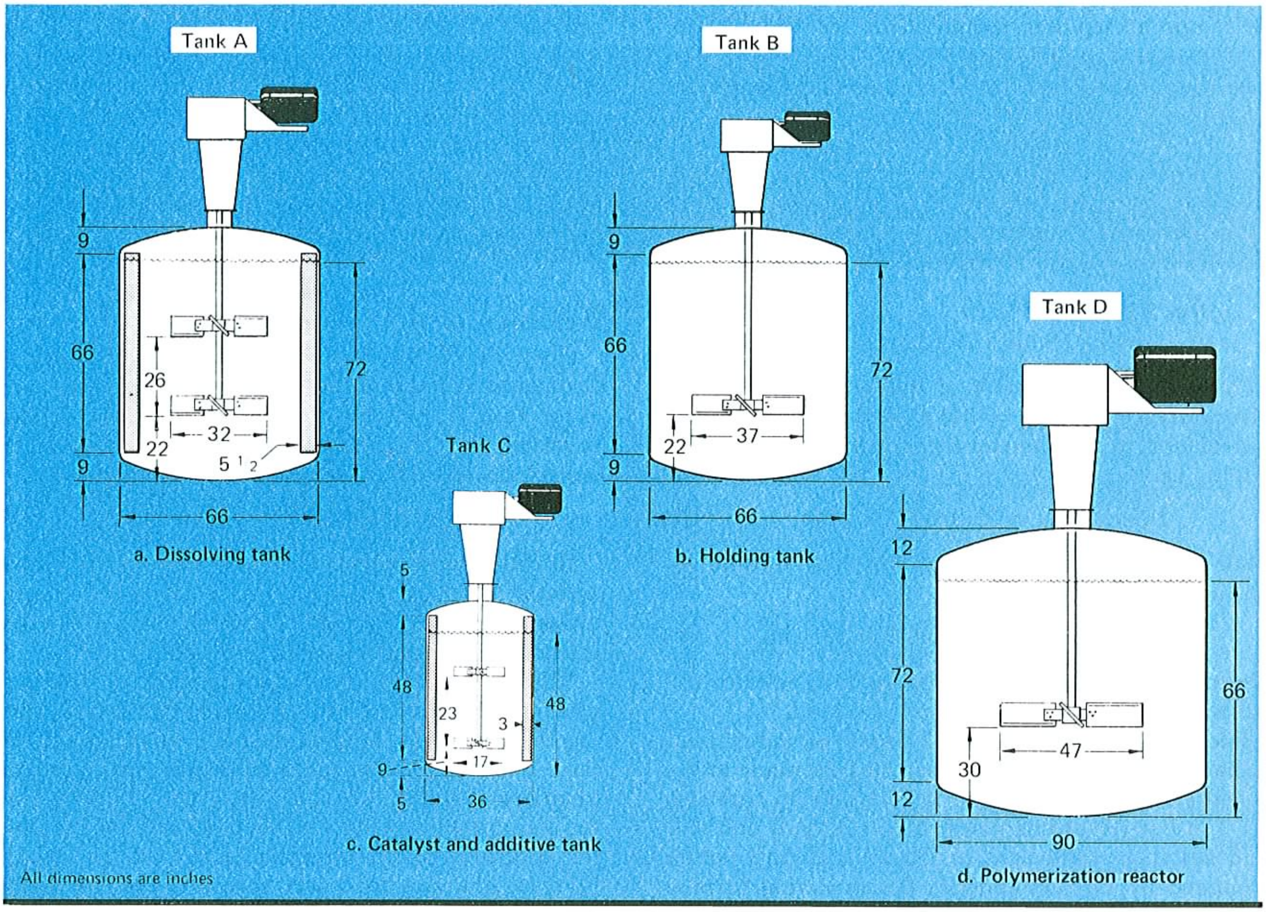

a. Dissolving tank

b. Holding tank

c. Catalyst and additive tank

d. Polymerization reactor

Dimensions and equipment details for the existing agitated vessels of polymerization process **Fig. 2**

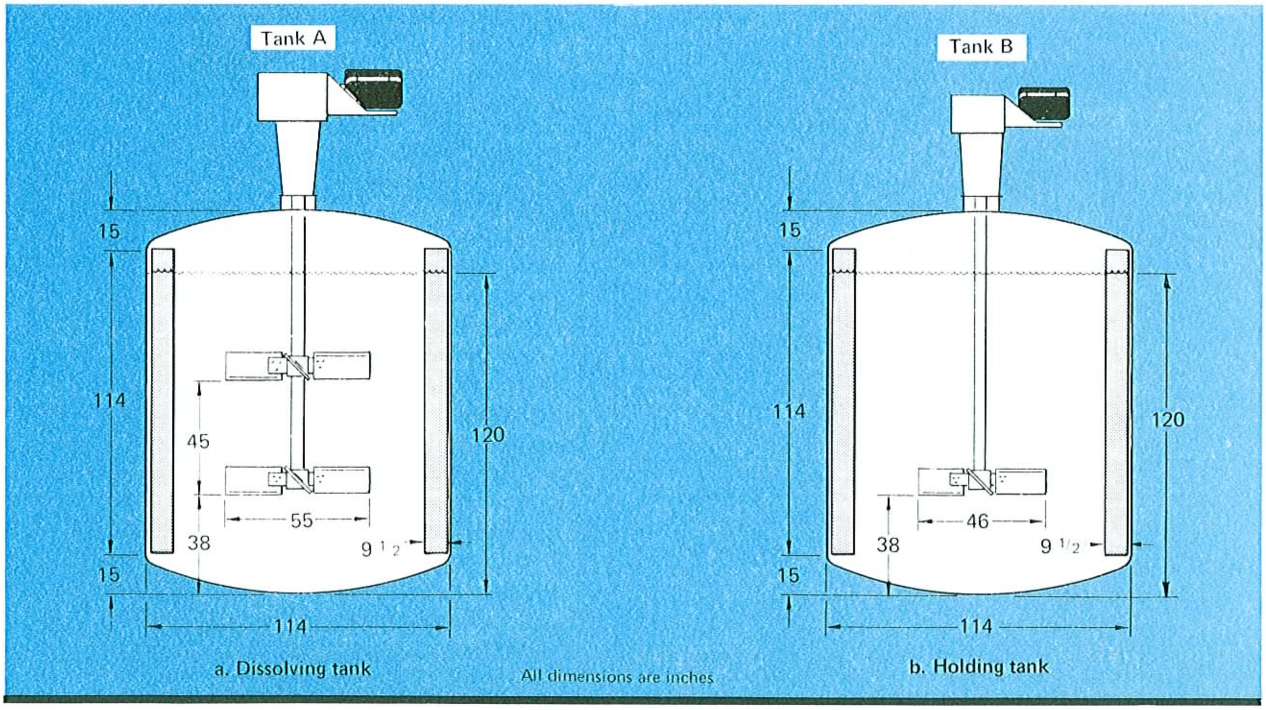

a. Dissolving tank

b. Holding tank

Redesigned tanks along with required baffling and agitators for the five-fold increase in capacity

The next step in the scale-up procedure is to estimate the motor horsepower requirements for two 55.3-in. turbines operating at 57.9 rpm in a 5,000-cp liquid. The power required for each turbine can be calculated from:

$$H_p = (D_T/394)^5 S_g N^3 \tag{6}$$

where D_T is the turbine diameter for turbulent conditions.

The Reynolds number for the conditions in the large-scale equipment is obtained from:

$$N_{Re} = 10.7(D^2 N S_g/\mu) \tag{7}$$

$$N_{Re} = 10.7(55.3)^2(57.9)(0.9)/5{,}000 = 341$$

From Table V in Part 4 of this series, we find the correction factor for $N_{Re} = 341$ to be 0.97. This gives an equivalent turbine diameter for turbulent conditions of 57.0 in., i.e.:

$$D_T = D/C_F = 55.3/0.97 = 57.0 \tag{8}$$

We calculate the horsepower for each turbine by substituting into Eq. (6):

$$H_p = (57.0/394)^5\,(0.9)(57.9)^3 = 11.1 \text{ hp} \tag{9}$$

The total power requirement for the new agitator design is 22.2 hp, since two turbines are used.

Since neither 57.9 rpm nor 22.2 hp is an industrially available selection, an adjustment must be made to the nearest standard unit, which is 20 hp at 56 rpm (see Fig. 5 in Part 10 of this series). This standard unit will yield agitation equivalent to the nonstandard values calculated by Eq. (5) and (9). Recalculating turbine diameters for the standard selection confirms 55 in. for each of the two turbines. The redesign of Tank A is shown in Fig. 3.

As a check on our scale-up, the existing equipment provided a scale of agitation of 9 for 1,000 gal. The scaled-up unit should give a similar level of agitation in 5,000 gal. Unfortunately, 20 hp at 56 rpm does not appear in Table II of Part 4 (because the tables do not show all possible combinations). However, 15 hp at 56 rpm gives a scale level of 7, and 25 hp at 56 gives a scale level of 10, so 20 hp at 56 rpm must be either an 8 or 9. Hence, the scale-up checks with the design tables.

Redesign of the holding tank

Next, we shall redesign the holding tank (Tank B). Geometric scale-up of the tank dimensions is the same as for Tank A. (See Fig. 3.) However, a small problem develops when the agitator speed is calculated for the large-scale agitator, based on equal liquid motion:

$$N_2 = 56(66/114) = 32.4 \text{ rpm} \tag{10}$$

In order to provide such a low speed with a small agitator drive, a more-expensive low-speed electric motor may be required. Therefore, an alternative method of scale-up might be preferable.

The existing unit, 1.5 hp at 56 rpm, should provide a scale of agitation of 4 for 1,000 gal at 5,000 cp (according to Table II in Part 4). In order to maintain the same level of agitation in the 5,000-gal tank, four combinations of horsepower and speed are obtained from the design table: 10/84, 7.5/68, 5/45 and 3/37. Two of the selections are for speeds higher than the existing 56 rpm, and two for lower speeds. Thus, the design procedure can be used for scale-up with fewer restrictions on speed than with scale-up using Eq. (5).

Let us suppose that the 7.5-hp at 68-rpm unit was

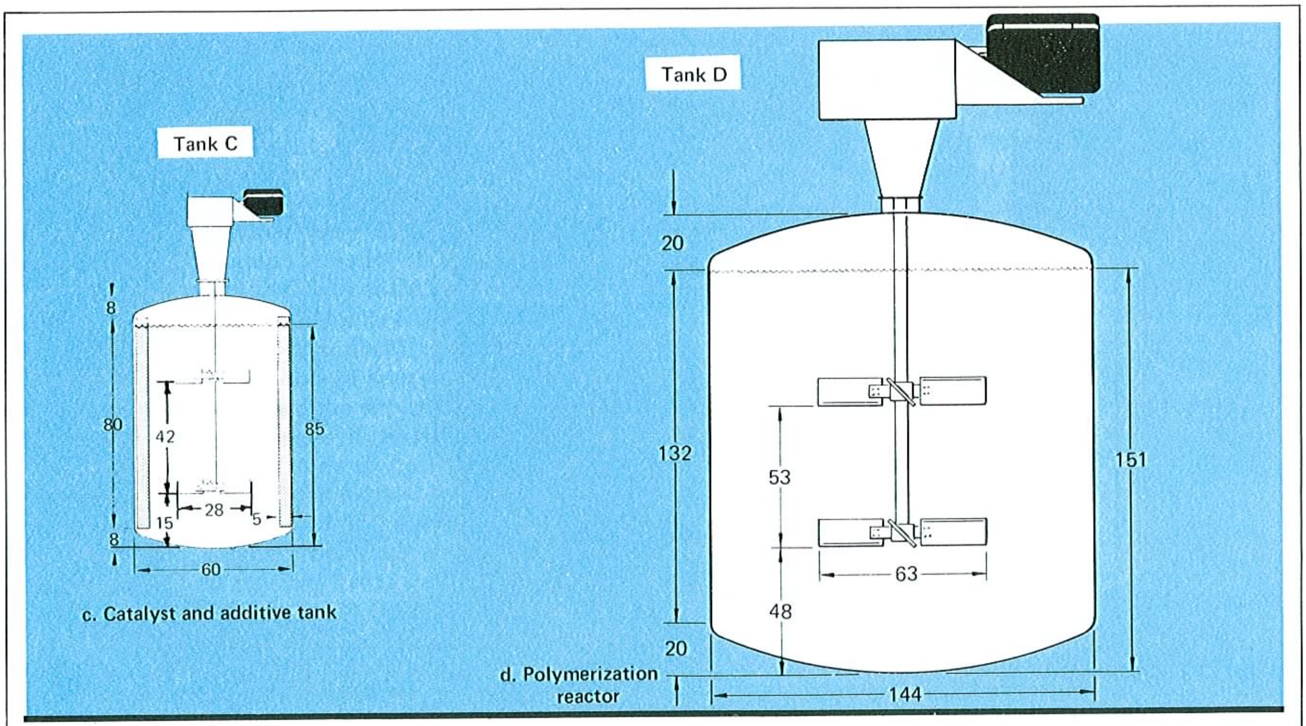

c. Catalyst and additive tank

d. Polymerization reactor

follow the design guidelines explained in the example for the polymerization process

Fig. 3

Process variables and additional equipment details for the bulk-polymerization example — Table II

Classification	Blending and motion		Blending and motion		Solids suspension		Blending and motion	
Required process result	Dissolve 5% rubber crumb in styrene		Maintain liquid motion and promote heat transfer		Suspend catalyst particles Blend additives		Agitation for bulk polymerization 5,000 to 25,000 cp	
Problem magnitude	Tank A		Tank B		Tank C		Tank D	
	Existing	Scaled-up	Existing	Scaled-up	Existing	Scaled-up	Existing	Scaled-up
Size and difficulty								
Volume, V, gal	1,000	5,000	1,000	5,000	200	1,000	2,000	10,000
Specific gravity, S_g	0.9	0.9	0.9	0.9	0.9	0.9	0.95	0.95
Equivalent volume, $V_{eg} = S_g V$, gal	900	4,500	900	4,500	180	900	1,900	9,500
Primary variable,								
Viscostiy, μ, cp	5,000	5,000	5,000	5,000	–	–	25,000	25,000
Terminal velocity, u_t, ft/min	–	–	–	–	10	10		
Equipment selection								
Number of turbines	2	2	1	1	2	2	1	2
Blade type	Pitched	Pitched	Pitched	Pitched	Pitched	Pitched	Pitched	Pitched
Baffles								
Number	4	4	None	4	4	4	None	None
Location,°	90	90	–	90	90	90	–	–
Width, in.	5.5	9.5	–	9.5	3	5	–	–
Length, in.	66	114	–	114	48	80	–	–
Scale of agitation	9	9	4	4	10	7	9	9
Agitator drive								
Power and shaftspeed, hp/rpm	10/100	20/56	1.5/56	7.5/68	2/125	2/84	40/100	100/68
Impeller diameter, in.	32	55	37	46	17	28	47	63

chosen for the redesigned version of Tank B. A properly sized turbine must be selected to load this equipment. The turbine size for turbulent agitation can be calculated from the following equation for pitched-blade turbines:

$$D_T = 394(H_p/S_g N^3)^{1/5} \qquad (11)$$

$$D_T = 394[7.5/(0.9)(68^3)]^{1/5} = 47.9 \text{ in.}$$

The Reynolds number for this turbine is about 300, which requires a correction factor of 0.97 (refer to Table V in Part 4) to be applied to the turbine diameter. A single 46-in.-dia. turbine properly loads the 7.5-hp/68-rpm unit.

A further consideration for design concerns the recommendations for baffling (Table VI in Part 4). Since 5,000 cp is the dividing line for baffles in tanks over 1,000-gal capacity, baffles are not absolutely necessary although not undesirable. The holding tank is also used to preheat the batch; so heat-transfer rate should be considered. Correlations for heat transfer in jacketed vessels* show a 37% increase in the process-side coefficient for four baffles as compared to no baffles in this range of Reynolds numbers. The addition of baffles is thus desirable.

The redesign of the holding tank demonstrates how the design procedure can be used to scale up a typical agitation problem without a strict geometrically similar turbine. Rechecking the design procedure also helps correct errors that might have existed with the original design or details, such as baffles that might be overlooked with scale-up procedures.

Catalyst and additive tank

The next element of the styrene-polymerization process is the catalyst and additive tank (Tank C), in which both blending and solids suspension are done. The blending requires a relatively low level of agitation for the low-viscosity miscible additives, while nearly uniform suspension of the catalyst particles requires greater agitation. Scale-up of Tank C will be based on equal solids suspension.

Geometric scale-up of Tank C from 36 in. dia. to 60 in. dia. provides the increased capacity from 200 to 1,000 gal. Scale-up of the impeller is according to the same scale ratio:

$$D_2 = D_1(R) = 17(60/36) = 28.3 \text{ in.} \qquad (12)$$

The agitator speed for the large agitator is calculated from the speed of the existing small-scale unit from Eq. (5) and by using a scale-up exponent, n, for equal solids suspension of 0.75:

$$N_2 = 125(36/60)^{0.75} = 85.2 \text{ rpm} \qquad (13)$$

By substituting into Eq. (6), we calculate the power for each turbine as:

$$H_p = (28.3/394)^5(0.9)(85.2)^3 = 1.06 \text{ hp} \qquad (14)$$

For both turbines, the total power is about 2.1 hp.

---

*Brooks, G. and Su, G.-J., *Chem. Eng. Progr.*, Oct. 1959, p. 54.

The nearest standard selection is 2 hp at 84 rpm (from Fig. 5 in Part 10). Two 28-in.-dia. turbines properly load the agitator for solids suspension.

As a double check on the redesign of Tank C, we shall compare the selections to those in the solids-suspension design procedure. (Selections for a settling velocity of 10 ft/min are shown in Table III of Part 5.)

The smallest equivalent volume in the table is 500 gal, for which the existing unit (2 hp/125 rpm) would provide a scale of agitation of 8. In 200 gal (volume of existing Tank C), this selection should provide a scale of agitation of 10. The unit (sized by scale-up) for the 1,000-gal Tank C is 2 hp at 84 rpm, producing a scale of agitation of only 7.

There appears to be some error in the scale-up for Tank C. However, closer scrutiny reveals that the two 17-in.-dia. turbines in the existing tank draw only about 0.5 hp. Underloading of the agitator, therefore, results in a lower scale of agitation than is available from the installed equipment. The effect of underloading is more significant with high horsepowers. Since no problem was indicated with the existing equipment, and since nearly-uniform suspension should be provided by a scale of agitation of 7, the agitator of 2 hp/84 rpm should be adequate.

Polymerization reactor

The final agitator to be redesigned is for the polymerization reactor (Tank D). In this reactor, the viscosity increases from 5,000 to 25,000 cp as a result of polymerization. Design should be based on a high level of liquid motion for the maximum viscosity. According to the design procedure (Table III in Part 4), 40 hp at 100 rpm should provide a scale of agitation of 9 in the existing reactor.

Geometric scale-up of the tank dimensions from 2,000 gal in a 90-in.-dia. tank should require a 156-in.-dia. tank for 10,000 gal. As frequently occurs with process equipment, a maximum allowable tank diameter, for instance 144 in., may result from installation or transportation restrictions. For illustrative purposes, we will redesign the polymerization reactor for a 144-in.-dia. tank. Geometric configuration of the tank depends on the height required for 10,000-gal capacity.

Since geometric similarity is not maintained, the scale-up procedure (Part 10 of the series) should not be used to redesign the agitator. Instead, the design procedure in Part 4 of the series will be used. Two selections (150/100 and 100/68) are shown for a scale of agitation of 9 in 10,000 gal for 25,000 cp. We will redesign for 100 hp at 68 rpm.

Once the agitator selection is made, the first consideration is the number of impellers. From the guidelines in Table IV of Part 4, we find that two impellers should be used in the reactor because of the increased liquid-level to tank-diameter ratio. Sizing each turbine to draw half the horsepower, we find that the diameter for each turbine from Eq. (11) under turbulent conditions:

$$D_T = 394\left[\frac{50}{0.95(68)^3}\right]^{1/5} = 69.2 \qquad (15)$$

The correction factor for a Reynolds number of 130 is 0.92. Properly sized turbines are 63 in. dia.

Geometry and equipment selections for the redesigned styrene-polymerization process are shown in Fig. 3 and Table II. Some of the tanks are similar to the original ones, while others show distinct changes. Depending on the methods used and the choices made in the redesign, several different selections are possible for each tank.

Only careful application of the design procedures and scale-up methods will assure equivalent performance. Associating correct scales-of-agitation with each agitator is an important step in process design.

Mechanical evaluation of agitators

Mechanical evaluation usually is related to maintenance problems. However, such evaluation should ascertain performance features as well as detect problem areas. Some mechanical problems are a result of stresses imposed by process conditions, while others may be a consequence of the mechanical features of the agitator drive and impeller system.

Mechanical evaluation of an agitator requires the consideration of numerous points dealing with the power train, shaft, and impeller system, and possibly the shaft seal or agitator supports.

One of the most critical elements of an agitator is the drive itself, which may be specifically designed for the agitator or, in some cases, may be just a general-purpose gear reducer. The type and design of gears, gear efficiency and service factor influence the satisfactory performance of the drive assembly.

Information required to evaluate the shaft and impeller system is based on the design procedure in Part 8 of the series. The diameter and rotational speed of the shaft, the size and weight of the impellers, and the application determine requirements for the shaft size. The type of shaft construction (solid, hollow, stepped, etc.) depends on the materials of construction, and on economic, strength and natural-frequency limitations. The size and strength of the impellers are a consequence of the operating and process conditions.

The shaft seal is also included in the mechanical evaluation. The type of seal and construction features will determine the performance. Problems with seals are frequently related to misapplication, shaft misalignment or shaft deflection.

Often overlooked in the evaluation of agitator performance is the method of support for the agitator drive. Several different configurations and types of support were discussed in Part 7 of this series. The loads placed on agitator supports are related to the installed weight, torque and bending moment, which will be transmitted to the supports. Process conditions or natural frequencies may contribute to vibrational problems. Mechanical evaluation of an agitated system is not complete until the total agitator and tank are characterized.

A combination of process and mechanical evaluation often reveals factors to consider in the design or specification of agitation equipment. The importance of agitation to many types of processes means that improvement in agitator design alone can significantly increase process performance. Application analysis is an integral part of the total design concept.